SANTOS Cheese grater #02 / Ice crusher #09
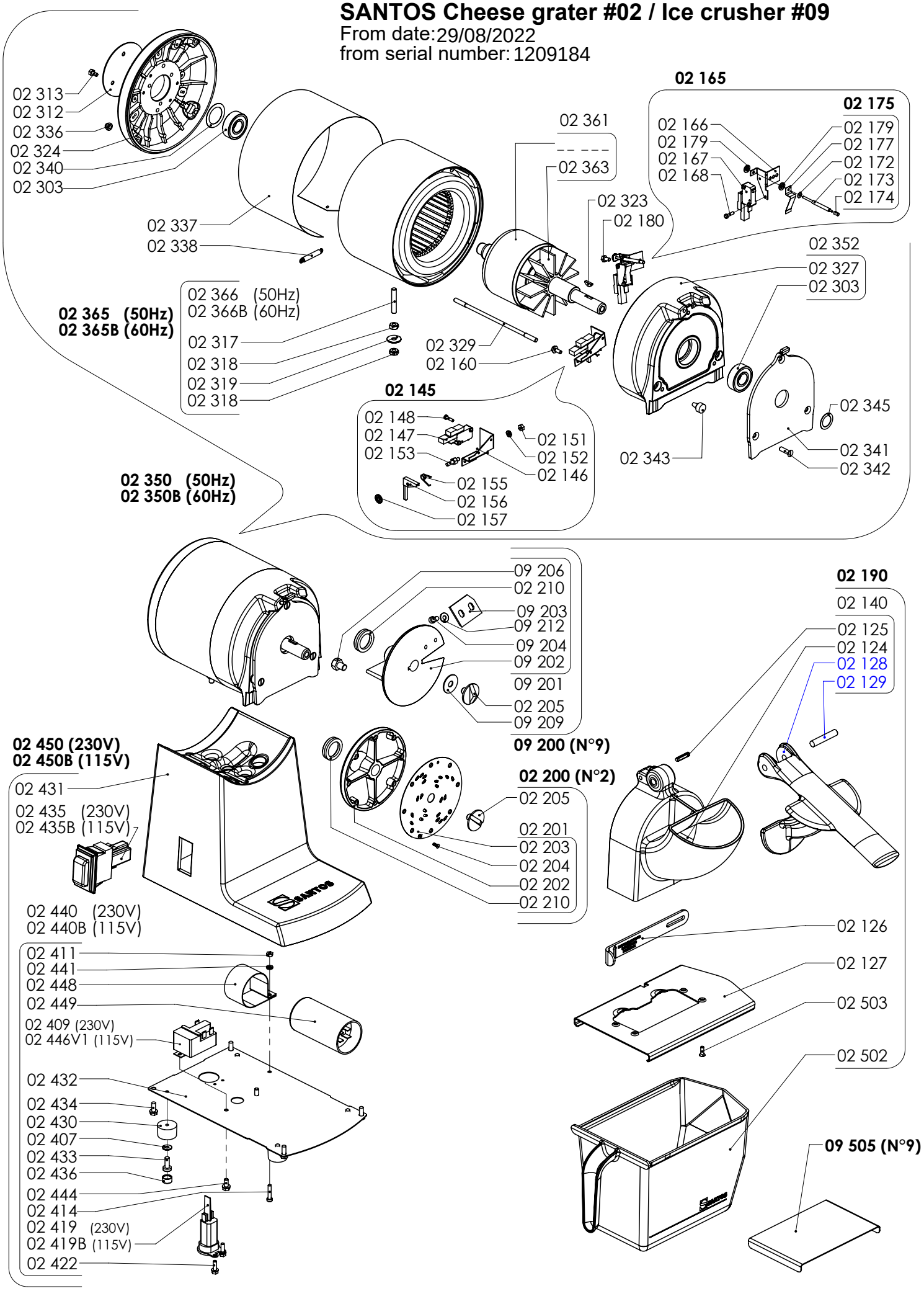
From date: 29/08/2022
from serial number: 1209184